EKB635V-XXP

PCB Terminal Blocks > PCB Terminal Blocks

Date:2026-11-27Version:V1



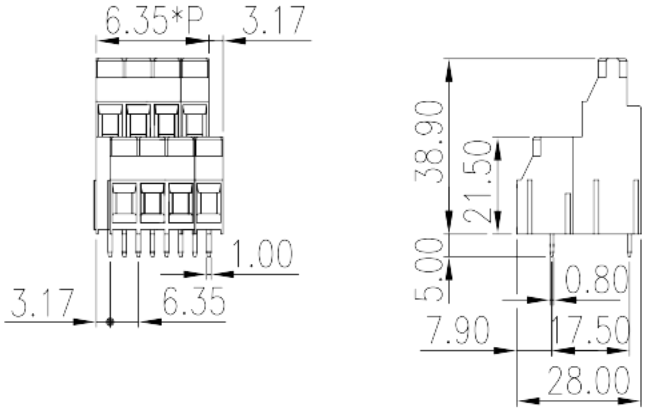

The web catalog is for reference only. Dinkle remains the right of product modification and engineering change of the design.
The final product is made according to engineering drawing.

Product Description

Pitch : 6.35mm, 300V, 30A

General information

Short description	PCB Terminal Blocks, Screw Connection
Category	PCB Terminal Blocks
Pitch (mm)	6.35
Color	Green (default)
Connection method	Screw Connection
Type of locking	Without
Length (mm)	6.35*(P/2-1)+3.81
Width (mm)	28
Height (mm)	38.9
Pin demensions (Thickness x Width)(mm)	0.8x1.0
PCB hole diameter (mm)	1.5~1.6
Number of positions	04P~48P
Level	Double level

Material information

Insulation material	PA

© DINKLE ENTERPRISE CO ,LTD. ALL RIGHT RESERVED

Insulation material group	I
Flame retardant rating , compliant with UL94	V0
Insulation resistance	□500MΩ at DC 500V
Conductor material	COPPER ALLOY
Plating of conductor surface	Tin PLATED

Connection data-IEC

Rated voltage (V)	630
Rated current (A)	32
Rated voltage (II/2)(V)	1000
Rated voltage (III/2) (V)	630
Rated voltage (III/3)(V)	400
Rated impulse voltage (II/2)(KV)	4
Rated impulse voltage (III/2)(KV)	4
Rated impulse voltage (III/3)(KV)	4
Conductor cross section solid. min (mm²)	0.2
Conductor cross section solid.max (mm²)	4
Conductor cross section stranded. min (mm²)	0.2
Conductor cross section stranded. max (mm²)	4
Conductor cross section flexible, with min ferrule without plastic sleeve (mm²)	0.25
Conductor cross section flexible, with max ferrule without plastic sleeve (mm²)	2.5
Conductor cross section flexible, with min ferrule with plastic sleeve (mm²)	0.25
Conductor cross section flexible, with max ferrule with plastic sleeve (mm²)	2.5
2 conductors with same cross section, solid, min (mm²)	0.2
2 conductors with same cross section, solid, max (mm²)	1.5
2 conductors with same cross section, stranded, min (mm²)	0.5
2 conductors with same cross section, stranded, max (mm²)	1.5
Screw thread	M3
Slotted screwdriver size (Blade thickness x Width)(mm)	0.8x4.0
Rated torque (N.m)	0.8
Stripping Length (mm)	10~11

© DINKLE ENTERPRISE CO ,LTD. ALL RIGHT RESERVED

Connection data-UL

Rated voltage (UL/CUL Group B)(V)	300
Rated current (UL/CUL Group B)(A)	30
Rated voltage (UL/CUL Group D)(V)	300
Rated current (UL/CUL Group D)(A)	10
Min. solid wire connection (AWG) acc. to UL/CUL	30
Max. solid wire connection AWG acc. to UL/CUL	10
Min. stranded wire connection AWG acc. to UL/CUL	30
Max. stranded wire connection AWG acc. to UL/CUL	10

Environment & Safety

Finger protection (YES or NO)	YES
Operating temperature. max (°C)	120
Operating temperature. min (°C)	-40

UL Recognized

Wire Range (Group B)(AWG)	30~10
Rated voltage (Group B)(V)	300
Rated current (Group B)(A)	30
Wire Range (Group D)(AWG)	30~10
Rated voltage (Group D)(V)	300
Rated current (Group D)(A)	10

CUL Recognized

Wire Range (Group B)(AWG)	30~10
Rated voltage (Group B)(V)	300
Rated current (Group B)(A)	30
Wire Ranget (Group D)(AWG)	30~10
Rated voltage (Group D)(V)	300
Rated current (Group D)(A)	10

Drawings

© DINKLE ENTERPRISE CO ,LTD. ALL RIGHT RESERVED

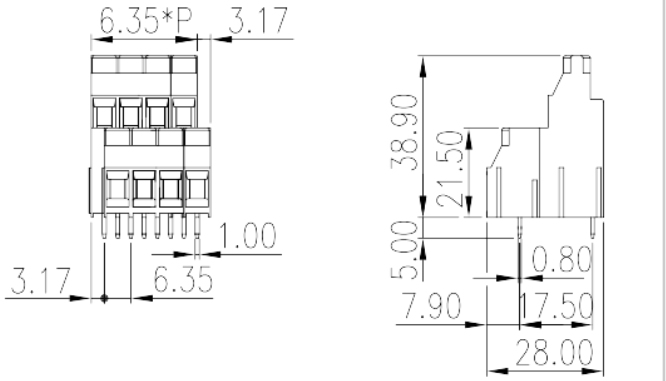

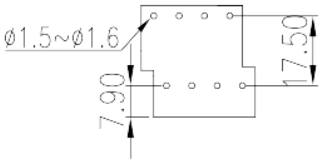

Approvals

© DINKLE ENTERPRISE CO ,LTD. ALL RIGHT RESERVED