2ESDSRM-XXP

PCB Terminal Blocks > PCB Connector-Plug

Date:2026-11-25Version:1.1

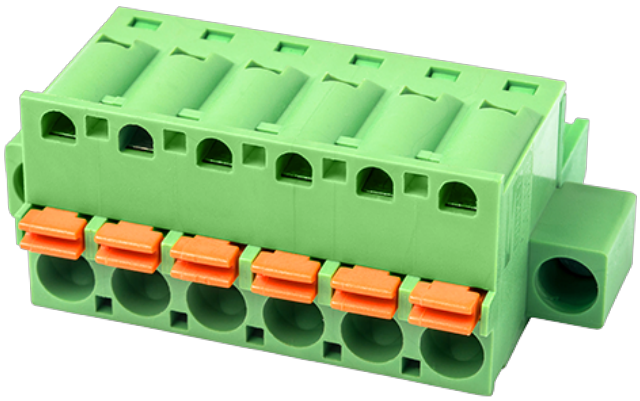

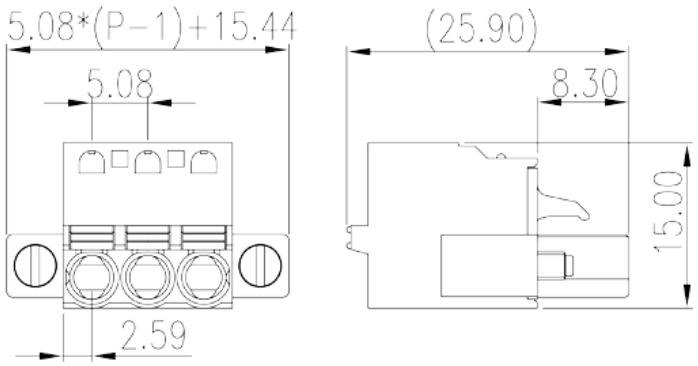

The web catalog is for reference only. Dinkle remains the right of product modification and engineering change of the design.
The final product is made according to engineering drawing.

Product Description

Pitch : 5.08 mm, 300V, 10A

General information

Short description	PCB Connector Plug, Push in design
Category	PCB Connector – Plug
Pitch (mm)	5.08
Color	Green (default)
Connection method	Push in Design
Type of locking	With screw flange
Length (mm)	5.08*(P-1)+15.44
Width (mm)	15
Height (mm)	25.9
Number of positions	02P~24P
Level	Single level

Material information

Insulation material	PA
Insulation material group	I
Flame retardant rating , compliant with UL94	V0

© DINKLE ENTERPRISE CO ,LTD. ALL RIGHT RESERVED

Insulation resistance	≥500MΩ at DC 500V
Conductor material	COPPER ALLOY
Plating of conductor surface	Tin PLATED

Connection data-IEC

Rated voltage (V)	630
Rated current (A)	18
Rated voltage (II/2)(V)	600
Rated voltage (III/2) (V)	320
Rated voltage (III/3)(V)	250
Rated impulse voltage (II/2)(KV)	4
Rated impulse voltage (III/2)(KV)	4
Rated impulse voltage (III/3)(KV)	4
Conductor cross section solid. min (mm²)	0.2
Conductor cross section solid.max (mm²)	2.5
Conductor cross section stranded. min (mm²)	0.2
Conductor cross section stranded. max (mm²)	2.5
Conductor cross section flexible, with min ferrule without plastic sleeve (mm²)	0.25
Conductor cross section flexible, with max ferrule without plastic sleeve (mm²)	2.5
Conductor cross section flexible, with min ferrule with plastic sleeve (mm²)	0.25
Conductor cross section flexible, with max ferrule with plastic sleeve (mm²)	2.5
2 conductors with same cross section flexible, min twin ferrules with plastic sleeve (mm²)	0.5
2 conductors with same cross section flexible, max twin ferrules with plastic sleeve (mm²)	1
Stripping Length (mm)	10~11

Connection data-UL

Rated voltage (UL/CUL Group B)(V)	300
Rated current (UL/CUL Group B)(A)	10
Rated voltage (UL/CUL Group D)(V)	300
Rated current (UL/CUL Group D)(A)	10
Min. solid wire connection (AWG) acc. to UL/CUL	26
Max. solid wire connection AWG acc. to UL/CUL	12

© DINKLE ENTERPRISE CO ,LTD. ALL RIGHT RESERVED

Min. stranded wire connection AWG acc. to UL/CUL	26
Max. stranded wire connection AWG acc. to UL/CUL	12

Environment & Safety

Finger protection (YES or NO)	YES
Operating temperature. max (°C)	120
Operating temperature. min (°C)	-40

UL Recognized

Wire Range (Group B)(AWG)	26~12
Rated voltage (Group B)(V)	300
Rated current (Group B)(A)	10
Wire Range (Group D)(AWG)	26~12
Rated voltage (Group D)(V)	300
Rated current (Group D)(A)	10

CUL Recognized

Wire Range (Group B)(AWG)	26~12
Rated voltage (Group B)(V)	300
Rated current (Group B)(A)	10
Wire Ranget (Group D)(AWG)	26~12
Rated voltage (Group D)(V)	300
Rated current (Group D)(A)	10

VDE Approval

Wire Range (mm^2)	0.2~2.5
Rated voltage (V)	630
Rated current (A)	18

Drawings

© DINKLE ENTERPRISE CO ,LTD. ALL RIGHT RESERVED

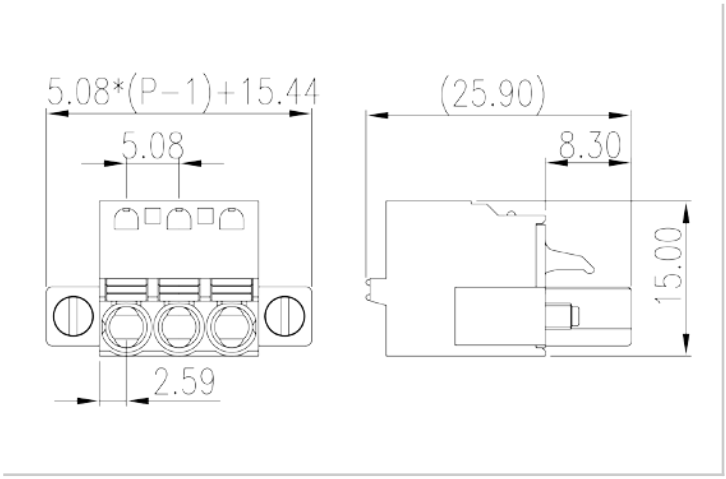

Approvals

© DINKLE ENTERPRISE CO ,LTD. ALL RIGHT RESERVED