DKZ70B

DIN Rail Terminal Blocks > Busbar Terminal Blocks

Date:2026-11-25Version:1.1



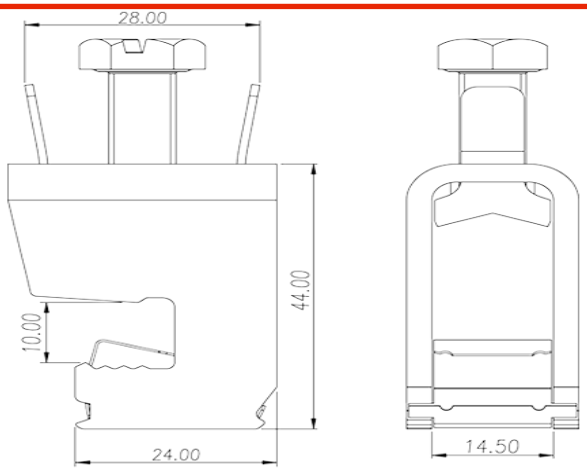

The web catalog is for reference only. Dinkle remains the right of product modification and engineering change of the design. The final product is made according to engineering drawing.

Product Description

M8, Steel

General information

Short description	DIN Rail terminal blocks, Busbar terminal blocks
Connection method	Screw connection
Type of locking	Busbar mounting
Connection points	1

Connection data-IEC

Conductor cross section solid. min (mm²)	16
Conductor cross section solid.max (mm²)	70
Conductor cross section stranded. min (mm²)	16
Conductor cross section stranded. max (mm²)	70
Screw thread	M8
Slotted screwdriver size (Blade thickness x Width)(mm)	1.0x5.5
Philips screwdriver size	PH3
Rated torque (N.m)	10
End cover plate required	NO
Grounding connections	NO

© DINKLE ENTERPRISE CO ,LTD. ALL RIGHT RESERVED

Connection data-UL

Min. solid wire connection (AWG) acc. to UL/CUL	4
Max. solid wire connection AWG acc. to UL/CUL	2/0
Min. stranded wire connection AWG acc. to UL/CUL	4
Max. stranded wire connection AWG acc. to UL/CUL	2/0

Environment & Safety

Back of the hand protection (YES or NO)	NO
Finger protection (YES or NO)	NO

UL Recognized

Wire Range (Group B)(AWG)	4~2/0

CUL Recognized

Wire Range (Group B)(AWG)	4~2/0

Drawings

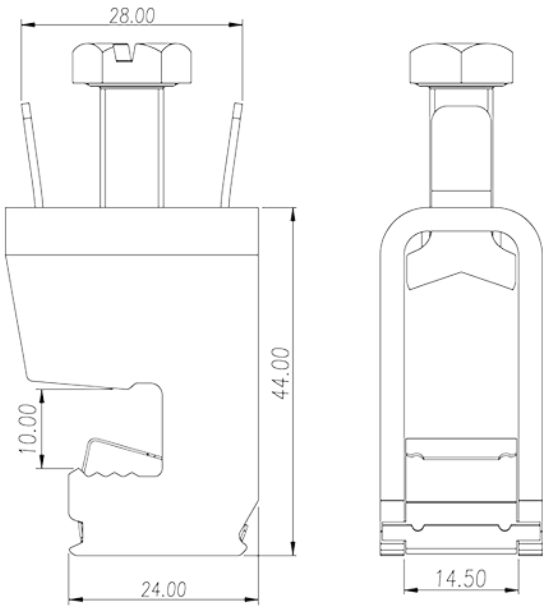

Approvals

© DINKLE ENTERPRISE CO ,LTD. ALL RIGHT RESERVED

© DINKLE ENTERPRISE CO ,LTD. ALL RIGHT RESERVED