TKE01

PCB Terminal Blocks > Transformer Terminal Blocks

Date:2026-11-24Version:1.2

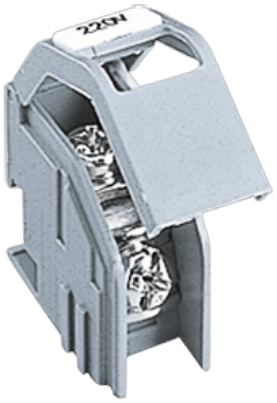

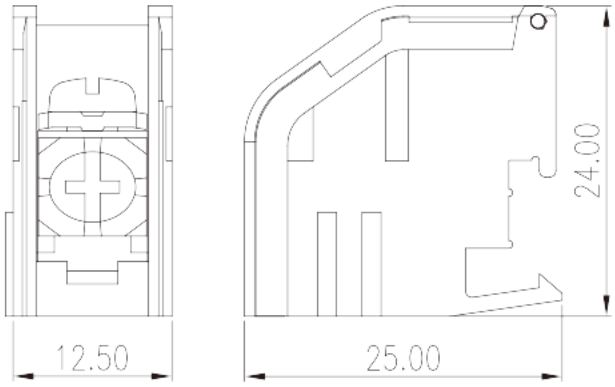

The web catalog is for reference only. Dinkle remains the right of product modification and engineering change of the design.
The final product is made according to engineering drawing.

Product Description

M4, 600V, 30A

General information

Short description	Transformer terminal blocks, Screw connection
Color	Gray
Connection method	Screw connection
Type of locking	Rail mounting

Material information

Insulation material	PA
Insulation material group	I
Flame retardant rating , compliant with UL94	V0
Conductor material	COPPER ALLOY
Plating of conductor surface	Tin PLATED

Connection data-IEC

Rated voltage (V)	800
Rated current (A)	24
Rated voltage (III/3)(V)	800

© DINKLE ENTERPRISE CO ,LTD. ALL RIGHT RESERVED

Rated impulse voltage (II/2)(KV)	8
Rated impulse voltage (III/2)(KV)	8
Rated impulse voltage (III/3)(KV)	8
Conductor cross section solid. min (mm²)	0.5
Conductor cross section solid.max (mm²)	2.5
Conductor cross section stranded. min (mm²)	0.5
Conductor cross section stranded. max (mm²)	2.5
Screw thread	M4
Slotted screwdriver size (Blade thickness x Width)(mm)	1.0x5.5
Philips screwdriver size	PH2
Rated torque (N.m)	1.76
Stripping Length (mm)	11~12

Connection data-UL

Rated voltage (UL/CUL Group B)(V)	600
Rated current (UL/CUL Group B)(A)	30
Rated voltage (UL/CUL Group C)(V)	600
Rated current (UL/CUL Group C)(A)	30
Rated voltage (UL/CUL Group D)(V)	600
Rated current (UL/CUL Group D)(A)	5
Min. solid wire connection (AWG) acc. to UL/CUL	18
Max. solid wire connection AWG acc. to UL/CUL	12
Min. stranded wire connection AWG acc. to UL/CUL	18
Max. stranded wire connection AWG acc. to UL/CUL	12

Environment & Safety

Back of the hand protection (YES or NO)	YES
Finger protection (YES or NO)	YES
Operating temperature. max (°C)	115
Operating temperature. min (°C)	-40

UL Recognized

Wire Range (Group B)(AWG)	12~18
Rated voltage (Group B)(V)	600
Rated current (Group B)(A)	30

© DINKLE ENTERPRISE CO ,LTD. ALL RIGHT RESERVED

Wire Range (Group C)(AWG)	12~18
Rated voltage (Group C)(V)	600
Rated current (Group C)(A)	30
Wire Range (Group D)(AWG)	12~18
Rated voltage (Group D)(V)	600
Rated current (Group D)(A)	5

CUL Recognized

Wire Range (Group B)(AWG)	12~18
Rated voltage (Group B)(V)	600
Rated current (Group B)(A)	30
Wire Range (Group C)(AWG)	12~18
Rated voltage (Group C)(V)	600
Rated current (Group C)(A)	30
Wire Ranget (Group D)(AWG)	12~18
Rated voltage (Group D)(V)	600
Rated current (Group D)(A)	5

Drawings

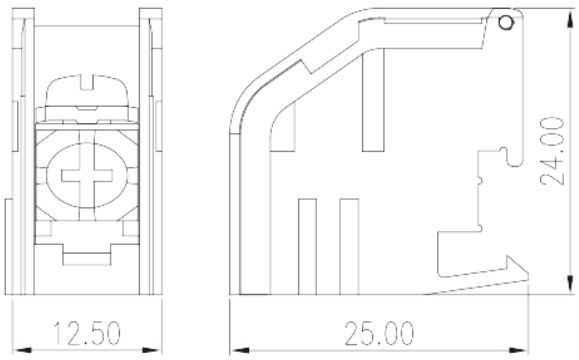

Approvals

© DINKLE ENTERPRISE CO ,LTD. ALL RIGHT RESERVED

© DINKLE ENTERPRISE CO ,LTD. ALL RIGHT RESERVED