0225-12XX

PCB Terminal Blocks > PCB Connector-Socket

Date:2026-11-30Version:1.2

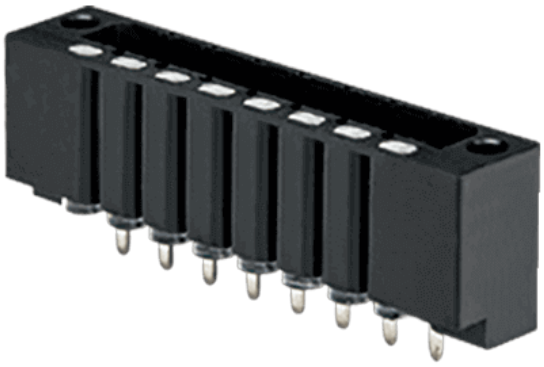

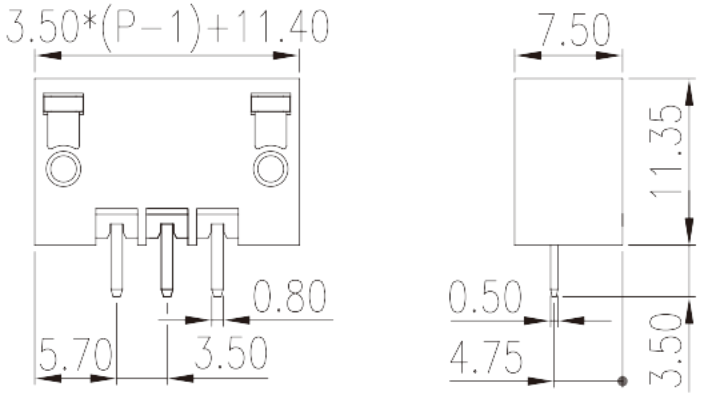

The web catalog is for reference only. Dinkle remains the right of product modification and engineering change of the design. The final product is made according to engineering drawing.

Product Description

Pitch : 3.50 mm, 300V, 8A

General information

Short description	PCB Connector–Socket, Wave soldering
Category	PCB Connector–Socket
Pitch (mm)	3.50
Color	Black (default)
Type of locking	With threaded flange
Soldering method	Wave soldering
Length (mm)	3.50*(P-1)+11.4
Width (mm)	7.5
Height (mm)	11.35
Pin demensions (Thickness x Width)(mm)	0.8x0.5
PCB hole diameter (mm)	1.2
Number of positions	02P~24P
Level	Single level

Material information

Insulation material	PA

© DINKLE ENTERPRISE CO ,LTD. ALL RIGHT RESERVED

Insulation material group	I
Flame retardant rating , compliant with UL94	V0
Insulation resistance	□500MΩ at DC 500V
Conductor material	COPPER ALLOY
Plating of conductor surface	Tin PLATED

Connection data-IEC

Rated voltage (V)	630
Rated current (A)	15
Rated voltage (II/2)(V)	630
Rated voltage (III/2) (V)	320
Rated voltage (III/3)(V)	250
Rated impulse voltage (II/2)(KV)	4
Rated impulse voltage (III/2)(KV)	4
Rated impulse voltage (III/3)(KV)	4
Tightening torque with flange. max (N.m)	0.1

Connection data-UL

Rated voltage (UL/CUL Group B)(V)	300
Rated current (UL/CUL Group B)(A)	8
Rated voltage (UL/CUL Group D)(V)	300
Rated current (UL/CUL Group D)(A)	8

Environment & Safety

Finger protection (YES or NO)	YES
Operating temperature. max (°C)	120
Operating temperature. min (°C)	-40

Drawings

© DINKLE ENTERPRISE CO ,LTD. ALL RIGHT RESERVED

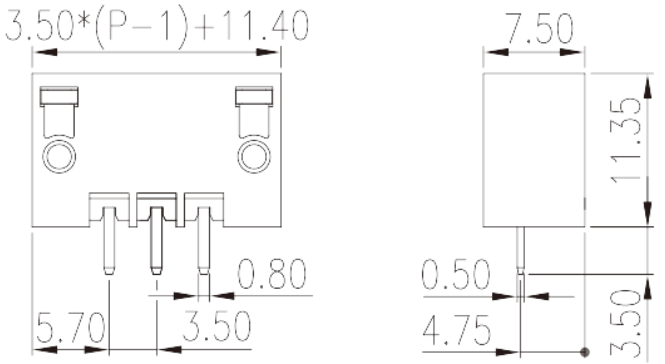

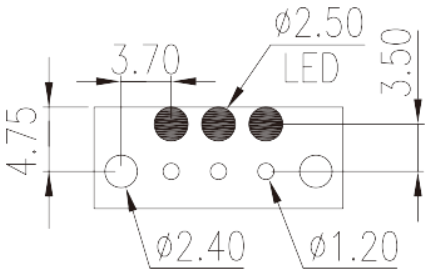

Approvals

© DINKLE ENTERPRISE CO ,LTD. ALL RIGHT RESERVED