0221-41XXL

PCB Terminal Blocks > PCB Connector-Socket

Date:2026-11-23Version:V1



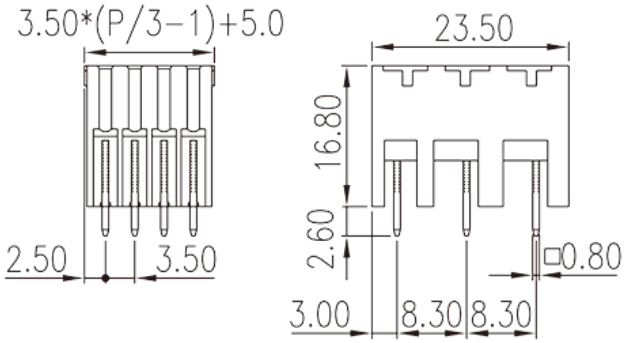

The web catalog is for reference only. Dinkle remains the right of product modification and engineering change of the design. The final product is made according to engineering drawing.

Product Description

Pitch : 3.50 mm, 300V, 8A

General information

Short description	PCB Connector–Socket, Reflow soldering
Category	PCB Connector–Socket
Pitch (mm)	3.50
Color	Black (default)
Type of locking	Without
Soldering method	Reflow Soldering (Temperature condition according to standard IPC/JEDEC J-STD-020E)
Length (mm)	3.50*(P/3-1)+5.0
Width (mm)	23.5
Height (mm)	16.8
Pin demensions (Thickness x Width)(mm)	0.8x0.8
PCB hole diameter (mm)	1.3~1.4
Number of positions	06P~72P
Level	Triple level

Material information

© DINKLE ENTERPRISE CO ,LTD. ALL RIGHT RESERVED

Insulation material	HIGH-TEMPERATURE PLASTICS
Insulation material group	I
Flame retardant rating , compliant with UL94	V0
Insulation resistance	500MΩ at DC 500V
Conductor material	COPPER ALLOY
Plating of conductor surface	Tin PLATED
MSL	2

Connection data-IEC

Rated voltage (V)	320
Rated current (A)	8
Rated voltage (II/2)(V)	320
Rated voltage (III/2) (V)	200
Rated voltage (III/3)(V)	200
Rated impulse voltage (II/2)(KV)	2.5
Rated impulse voltage (III/2)(KV)	2.5
Rated impulse voltage (III/3)(KV)	2.5

Connection data-UL

Rated voltage (UL/CUL Group B)(V)	300
Rated current (UL/CUL Group B)(A)	8

Environment & Safety

Finger protection (YES or NO)	YES
Operating temperature. max (°C)	120
Operating temperature. min (°C)	-40

Drawings

© DINKLE ENTERPRISE CO ,LTD. ALL RIGHT RESERVED

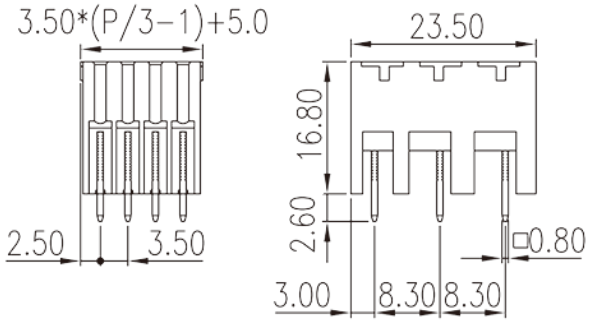

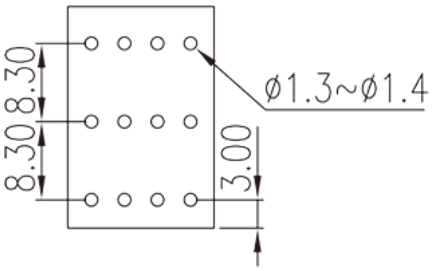

Approvals

CE RoHS Compliance

© DINKLE ENTERPRISE CO ,LTD. ALL RIGHT RESERVED