ECH350RR-XXPL

PCB Terminal Blocks > PCB Connector-Socket

Date:2026-11-23Version:V1



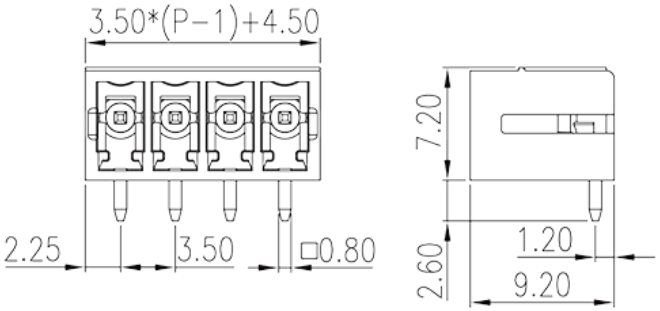

The web catalog is for reference only. Dinkle remains the right of product modification and engineering change of the design. The final product is made according to engineering drawing.

Product Description

Pitch : 3.50 mm, 300V, 8A

General information

Short description	PCB Connector – Socket, Reflow soldering
Category	PCB Connector – Socket
Pitch (mm)	3.50
Color	Black (default)
Type of locking	Without
Soldering method	Reflow Soldering (Temperature condition according to standard IPC/JEDEC J-STD-020E)
Length (mm)	3.50*(P-1)+4.5
Width (mm)	9.2
Height (mm)	7.2
Pin demensions (Thickness x Width)(mm)	0.8x0.8
PCB hole diameter (mm)	1.4
Number of positions	02P~24P
Level	Single level

Material information

© DINKLE ENTERPRISE CO ,LTD. ALL RIGHT RESERVED

Insulation material	HIGH-TEMPERATURE PLASTICS
Insulation material group	IIIa
Flame retardant rating , compliant with UL94	V0
Insulation resistance	□500MΩ at DC 500V
Conductor material	COPPER ALLOY
Plating of conductor surface	Tin PLATED
MSL	1

Connection data-IEC

Rated voltage (V)	320
Rated current (A)	14
Rated voltage (II/2)(V)	320
Rated voltage (III/2) (V)	160
Rated voltage (III/3)(V)	160
Rated impulse voltage (II/2)(KV)	2.5
Rated impulse voltage (III/2)(KV)	2.5
Rated impulse voltage (III/3)(KV)	2.5

Connection data-UL

Rated voltage (UL/CUL Group B)(V)	300
Rated current (UL/CUL Group B)(A)	8
Rated voltage (UL/CUL Group D)(V)	300
Rated current (UL/CUL Group D)(A)	8

Environment & Safety

Finger protection (YES or NO)	NO
Operating temperature. max (°C)	120
Operating temperature. min (°C)	-40

UL Recognized

Rated voltage (Group B)(V)	300
Rated current (Group B)(A)	8
Rated voltage (Group D)(V)	300
Rated current (Group D)(A)	8

CUL Recognized

© DINKLE ENTERPRISE CO ,LTD. ALL RIGHT RESERVED

Rated voltage (Group B)(V)	300
Rated current (Group B)(A)	8
Rated voltage (Group D)(V)	300
Rated current (Group D)(A)	8

VDE Approval

Rated voltage (V)	320
Rated current (A)	14

Drawings

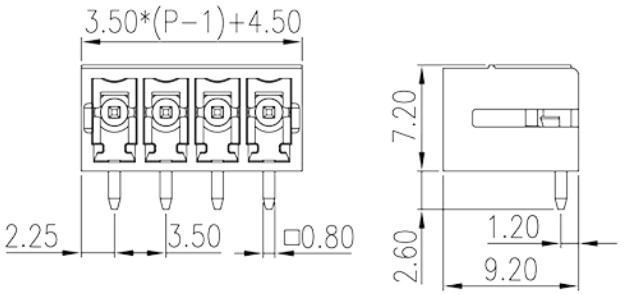

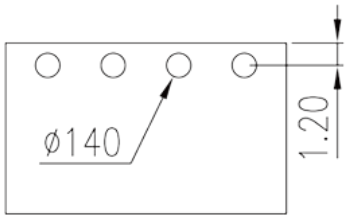

Approvals

© DINKLE ENTERPRISE CO ,LTD. ALL RIGHT RESERVED