DP1.5N

DIN Rail Terminal Blocks > Push-in Design

Date:2026-11-23Version:1.1

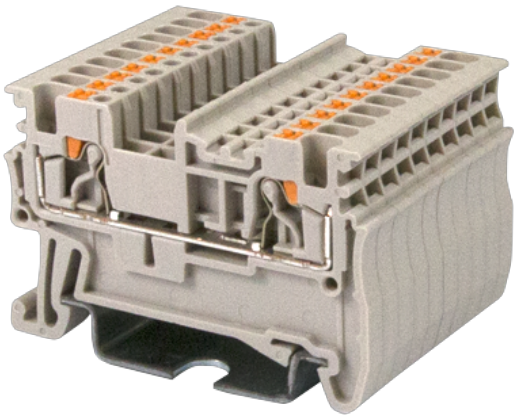

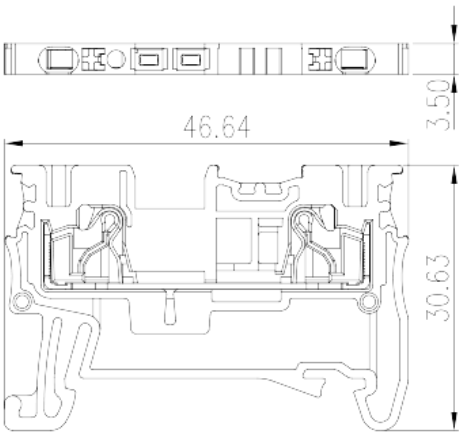

The web catalog is for reference only. Dinkle remains the right of product modification and engineering change of the design. The final product is made according to engineering drawing.

Product Description

300V, 15A, Beige (default)

General information

Short description	Single level Feed-Through Terminal Block, Push-in Design
Category	Single level Feed Through Terminal Block
Color	Beige (default)
Connection method	Push-in Design
Type of locking	Rail Mounting
Length (mm)	46.6
Width (mm)	3.5
Height (mm)	30.6
Number of positions	≧1P
Level	Single level
Connection points	2

Material information

Insulation material	PA
Insulation material group	I

© DINKLE ENTERPRISE CO ,LTD. ALL RIGHT RESERVED

Flame retardant rating , compliant with UL94	V0
Insulation resistance	≧500MΩ at DC 500V

Connection data-IEC

Rated voltage (V)	500
Rated current (A)	17.5
Rated voltage (III/3)(V)	500
Rated impulse voltage (III/3)(KV)	6
Conductor cross section solid. min (mm²)	0.14
Conductor cross section solid.max (mm²)	1.5
Conductor cross section stranded. min (mm²)	0.14
Conductor cross section stranded. max (mm²)	1.5
Conductor cross section flexible, with min ferrule without plastic sleeve (mm²)	0.25
Conductor cross section flexible, with max ferrule without plastic sleeve (mm²)	1.5
Conductor cross section flexible, with min ferrule with plastic sleeve (mm²)	0.25
Conductor cross section flexible, with max ferrule with plastic sleeve (mm²)	0.75
Slotted screwdriver size (Blade thickness x Width)(mm)	0.4x2.5
Stripping Length (mm)	8
Mounting rail	TS-35
End cover plate required	YES
Grounding connections	NO

Connection data-UL

Rated voltage (UL/CUL Group B)(V)	300
Rated current (UL/CUL Group B)(A)	15
Rated voltage (UL/CUL Group C)(V)	300
Rated current (UL/CUL Group C)(A)	15
Rated voltage (UL/CUL Group D)(V)	300
Rated current (UL/CUL Group D)(A)	10
Min. solid wire connection (AWG) acc. to UL/CUL	26
Max. solid wire connection AWG acc. to UL/CUL	14
Min. stranded wire connection AWG acc. to UL/CUL	26
Max. stranded wire connection AWG acc. to UL/CUL	14

© DINKLE ENTERPRISE CO ,LTD. ALL RIGHT RESERVED

Environment & Safety

Back of the hand protection (YES or NO)	YES
Finger protection (YES or NO)	YES
Operating temperature. max (°C)	120
Operating temperature. min (°C)	-40

UL Recognized

Wire Range (Group B)(AWG)	26~14
Rated voltage (Group B)(V)	300
Rated current (Group B)(A)	15
Wire Range (Group C)(AWG)	26~14
Rated voltage (Group C)(V)	300
Rated current (Group C)(A)	15
Wire Range (Group D)(AWG)	26~14
Rated voltage (Group D)(V)	300
Rated current (Group D)(A)	10

CUL Recognized

Wire Range (Group B)(AWG)	26~14
Rated voltage (Group B)(V)	300
Rated current (Group B)(A)	15
Wire Range (Group C)(AWG)	26~14
Rated voltage (Group C)(V)	300
Rated current (Group C)(A)	15
Wire Ranget (Group D)(AWG)	26~14
Rated voltage (Group D)(V)	300
Rated current (Group D)(A)	10

VDE Approval

Wire Range (mm^2)	0.14~1.5
Rated voltage (V)	500
Rated current (A)	17.5

Drawings

© DINKLE ENTERPRISE CO ,LTD. ALL RIGHT RESERVED

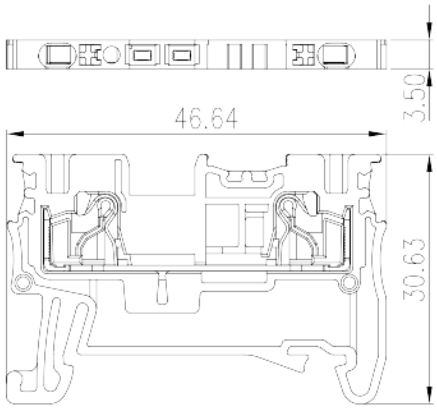



Approvals

© DINKLE ENTERPRISE CO ,LTD. ALL RIGHT RESERVED