TKE04

PCB Terminal Blocks > Transformer Terminal Blocks

Date:2026-11-24Version:1.2

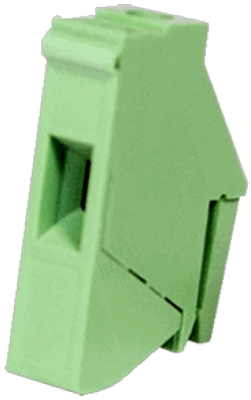

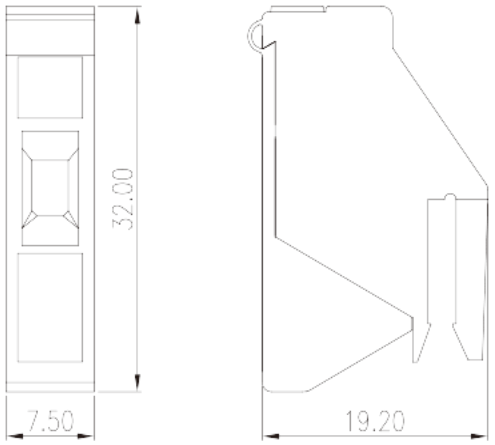

The web catalog is for reference only. Dinkle remains the right of product modification and engineering change of the design.
The final product is made according to engineering drawing.

Product Description

Pitch : 7.50 mm, M3, 600V, 25sol/30str

General information

Short description	Transformer terminal blocks, Screw connection
Pitch (mm)	7.5
Color	Green (default)
Connection method	Screw connection
Type of locking	Rail mounting

Material information

Insulation material	PA
Insulation material group	I
Flame retardant rating , compliant with UL94	V0
Conductor material	COPPER ALLOY
Plating of conductor surface	Tin PLATED

Connection data-IEC

Rated voltage (V)	800
Rated current (A)	32

© DINKLE ENTERPRISE CO ,LTD. ALL RIGHT RESERVED

Rated voltage (III/3)(V)	800
Rated impulse voltage (II/2)(KV)	8
Rated impulse voltage (III/2)(KV)	8
Screw thread	M3
Slotted screwdriver size (Blade thickness x Width)(mm)	0.8x4
Rated torque (N.m)	0.5
Stripping Length (mm)	10~11

Connection data-UL

Rated voltage (UL/CUL Group B)(V)	600
Rated current (UL/CUL Group B)(A)	25(Sol)/30(Str)
Rated voltage (UL/CUL Group C)(V)	600
Rated current (UL/CUL Group C)(A)	25(Sol)/30(Str)
Rated voltage (UL/CUL Group D)(V)	600
Rated current (UL/CUL Group D)(A)	5
Min. solid wire connection (AWG) acc. to UL/CUL	30
Max. solid wire connection AWG acc. to UL/CUL	10
Min. stranded wire connection AWG acc. to UL/CUL	30
Max. stranded wire connection AWG acc. to UL/CUL	10

Environment & Safety

Back of the hand protection (YES or NO)	YES
Finger protection (YES or NO)	YES
Operating temperature. max (°C)	115
Operating temperature. min (°C)	-40

UL Recognized

Wire Range (Group B)(AWG)	10~30
Rated voltage (Group B)(V)	600
Rated current (Group B)(A)	25(Sol)/30(Str)
Wire Range (Group C)(AWG)	10~30
Rated voltage (Group C)(V)	600
Rated current (Group C)(A)	25(Sol)/30(Str)
Wire Range (Group D)(AWG)	10~30
Rated voltage (Group D)(V)	600

© DINKLE ENTERPRISE CO ,LTD. ALL RIGHT RESERVED

Rated current (Group D)(A)	5

CUL Recognized

Wire Range (Group B)(AWG)	10~30
Rated voltage (Group B)(V)	600
Rated current (Group B)(A)	25(Sol)/30(Str)
Wire Range (Group C)(AWG)	10~30
Rated voltage (Group C)(V)	600
Rated current (Group C)(A)	25(Sol)/30(Str)
Wire Ranget (Group D)(AWG)	10~30
Rated voltage (Group D)(V)	600
Rated current (Group D)(A)	5

Drawings

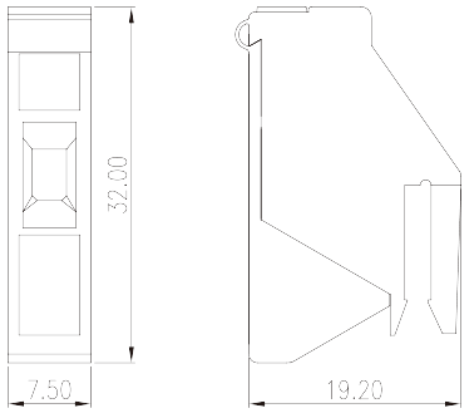

Approvals

© DINKLE ENTERPRISE CO ,LTD. ALL RIGHT RESERVED