DKM35-U

DIN Rail Terminal Blocks > Stud Connection

Date:2026-11-28



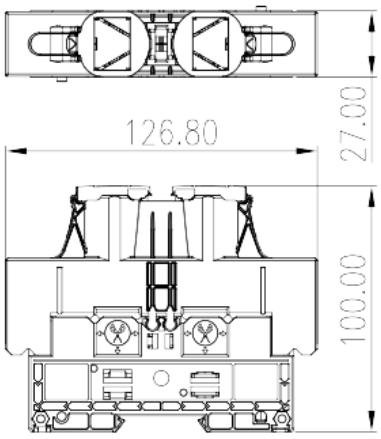

The web catalog is for reference only. Dinkle remains the right of product modification and engineering change of the design. The final product is made according to engineering drawing.

Product Description

M6, 1500V, 170A, Beige (default)

General information

Short description	Feed-through Single Level, Stud Connection
Category	Feed-through Single Level
Pitch (mm)	27
Color	Refer to drawing
Connection method	Stud Connection
Length (mm)	126.8
Width (mm)	27
Height (mm)	100
Level	Single level
Connection points	2

Material information

Insulation material	PA
Insulation material group	I
Flame retardant rating , compliant with UL94	V0
Insulation resistance	□500MΩ at DC 500V

© DINKLE ENTERPRISE CO ,LTD. ALL RIGHT RESERVED

Connection data-IEC

Rated voltage (V)	1500
Rated current (A)	125
Rated voltage (III/3)(V)	1500
Rated impulse voltage (III/3)(KV)	8
Conductor cross section solid. min (mm²)	2.5
Conductor cross section solid.max (mm²)	35
Conductor cross section stranded. min (mm²)	2.5
Conductor cross section stranded. max (mm²)	35
Screw thread	M6
Philips screwdriver size	10X6.3
Recommend tightening torque. min (N.m)	3
Recommend tightening torque. max (N.m)	6
Stripping Length (mm)	The stripping length depends on the specification provided by the cable lug manufacturer
Mounting rail	TS-35
End cover plate required	NO
Grounding connections	NO

Connection data-UL

Rated voltage (UL/CUL Group E)(V)	1500
Rated current (UL/CUL Group E)(A)	*Single-Cable 130A / Double-Cable 170A
Min. solid wire connection (AWG) acc. to UL/CUL	12
Max. solid wire connection AWG acc. to UL/CUL	1
Min. stranded wire connection AWG acc. to UL/CUL	12
Max. stranded wire connection AWG acc. to UL/CUL	1

Environment & Safety

Back of the hand protection (YES or NO)	YES
Finger protection (YES or NO)	NO
Operating temperature. max (°C)	120
Operating temperature. min (°C)	-40

UL Recognized

Wire Range (Group E)(AWG)	12~1

© DINKLE ENTERPRISE CO ,LTD. ALL RIGHT RESERVED

Rated voltage (Group E)(V)	1500
Rated current (Group E)(A)	*Single-Cable 130A / Double-Cable 170A

CUL Recognized

Wire Range (Group E)(AWG)	12~1
Rated voltage (Group E)(V)	1500
Rated current (Group E)(A)	*Single-Cable 130A / Double-Cable 170A

Drawings

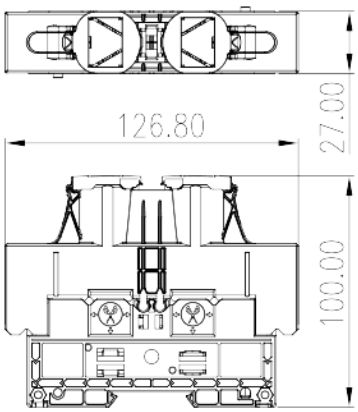

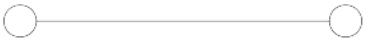

Approvals

© DINKLE ENTERPRISE CO ,LTD. ALL RIGHT RESERVED