DKM120-U

DIN Rail Terminal Blocks > Stud Connection

Date:2026-11-28



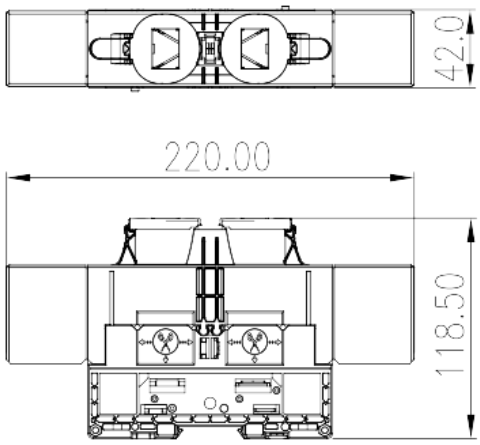

The web catalog is for reference only. Dinkle remains the right of product modification and engineering change of the design.
The final product is made according to engineering drawing.

Product Description

M10, 1500V, 300A, Beige (default)

General information

Short description	Feed-through Single Level, Stud Connection
Category	Feed-through Single Level
Color	Refer to drawing
Connection method	Stud Connection
Length (mm)	220
Width (mm)	42
Height (mm)	118.5
Level	Single level
Connection points	2

Material information

Insulation material	PA
Insulation material group	I
Flame retardant rating , compliant with UL94	V0
Insulation resistance	□500MΩ at DC 500V

© DINKLE ENTERPRISE CO ,LTD. ALL RIGHT RESERVED

Connection data-IEC

Rated voltage (V)	1500
Rated current (A)	269
Rated voltage (III/3)(V)	1500
Rated impulse voltage (III/3)(KV)	8
Conductor cross section solid. min (mm²)	6
Conductor cross section solid.max (mm²)	120
Conductor cross section stranded. min (mm²)	6
Conductor cross section stranded. max (mm²)	120
Screw thread	M10
Philips screwdriver size	15X10, 15X12.5
Recommend tightening torque. min (N.m)	10
Recommend tightening torque. max (N.m)	20
Stripping Length (mm)	The stripping length depends on the specification provided by the cable lug manufacturer
Mounting rail	TS-35
End cover plate required	NO
Grounding connections	NO

Connection data-UL

Rated voltage (UL/CUL Group E)(V)	1500
Rated current (UL/CUL Group E)(A)	*Single-Cable 255A / Double-Cable 300A
Min. solid wire connection (AWG) acc. to UL/CUL	10
Max. solid wire connection AWG acc. to UL/CUL	250 (kcmil)
Min. stranded wire connection AWG acc. to UL/CUL	10
Max. stranded wire connection AWG acc. to UL/CUL	250 (kcmil)

Environment & Safety

Back of the hand protection (YES or NO)	YES
Finger protection (YES or NO)	NO
Operating temperature. max (°C)	120
Operating temperature. min (°C)	-40

UL Recognized

Wire Range (Group E)(AWG)	10~250 (kcmil)

© DINKLE ENTERPRISE CO ,LTD. ALL RIGHT RESERVED

Rated voltage (Group E)(V)	1500
Rated current (Group E)(A)	*Single-Cable 255A / Double-Cable 300A

CUL Recognized

Wire Range (Group E)(AWG)	10~250 (kcmil)
Rated voltage (Group E)(V)	1500
Rated current (Group E)(A)	*Single-Cable 255A / Double-Cable 300A

Drawings

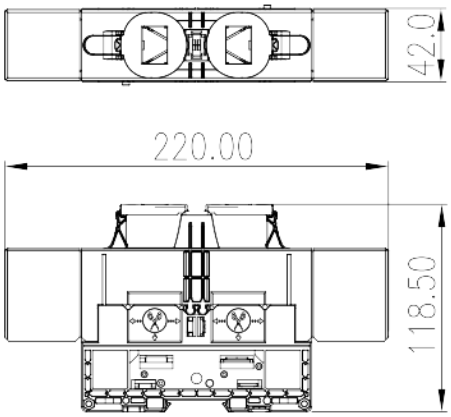

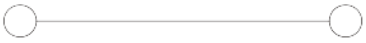

Approvals

© DINKLE ENTERPRISE CO ,LTD. ALL RIGHT RESERVED