0168-33XX

Barrier Terminal Blocks > Panel Feed-Through

Date:2026-11-24Version:1.1

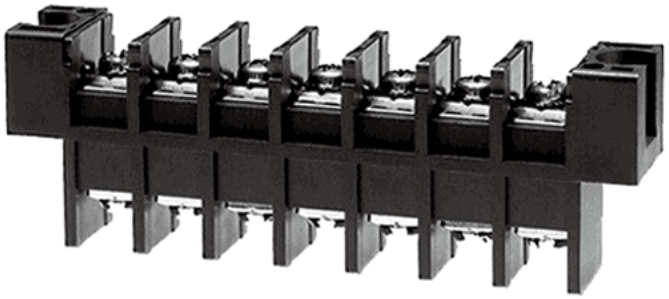

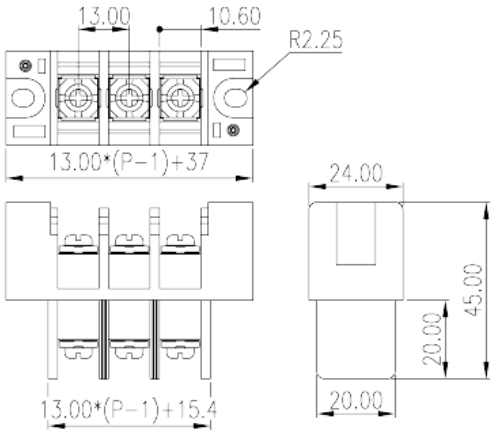

The web catalog is for reference only. Dinkle remains the right of product modification and engineering change of the design.
The final product is made according to engineering drawing.

Product Description

Pitch: 13mm , M4, 600V, 50A

General information

Short description	Barrier terminal blocks , Screw connection
Category	Panel Feed Through Terminal Blocks
Pitch (mm)	13
Color	Black(default)
Connection method	Screw connection
Type of locking	With mounting flange
Level	Single level

Material information

Insulation material	PBT
Insulation material group	IIIa
Flame retardant rating , compliant with UL94	V0
Conductor material	Copper Alloy
Plating of conductor surface	Tinned

Connection data-IEC

© DINKLE ENTERPRISE CO ,LTD. ALL RIGHT RESERVED

Rated voltage (V)	630
Rated current (A)	57
Rated voltage (II/2)(V)	1000
Rated voltage (III/2) (V)	1000
Rated voltage (III/3)(V)	630
Rated impulse voltage (II/2)(KV)	8
Rated impulse voltage (III/2)(KV)	8
Rated impulse voltage (III/3)(KV)	8
Conductor cross section solid. min (mm^2)	0.34
Conductor cross section solid.max (mm^2)	10
Conductor cross section stranded. min (mm^2)	0.34
Conductor cross section stranded. max (mm^2)	10
2 conductors with same cross section, solid, max (mm^2)	6
2 conductors with same cross section, stranded, max (mm^2)	6
Screw thread	M4
Slotted screwdriver size (Blade thickness x Width)(mm)	1.0x5.5
Philips screwdriver size	PH2
Rated torque (N.m)	1.8
Recommend tightening torque. min (N.m)	1.2
Recommend tightening torque. max (N.m)	1.8
Stripping Length (mm)	8

Connection data-UL

Rated voltage (UL/CUL Group B)(V)	600
Rated current (UL/CUL Group B)(A)	50
Rated voltage (UL/CUL Group C)(V)	600
Rated current (UL/CUL Group C)(A)	50
Min. solid wire connection (AWG) acc. to UL/CUL	22
Max. solid wire connection AWG acc. to UL/CUL	8
Min. stranded wire connection AWG acc. to UL/CUL	22
Max. stranded wire connection AWG acc. to UL/CUL	8

Environment & Safety

Back of the hand protection (YES or NO)	YES

© DINKLE ENTERPRISE CO ,LTD. ALL RIGHT RESERVED

Operating temperature. max (°C)	120
Operating temperature. min (°C)	-40

UL Recognized

Wire Range (Group B)(AWG)	22~8
Rated voltage (Group B)(V)	600
Rated current (Group B)(A)	50
Wire Range (Group C)(AWG)	22~8
Rated voltage (Group C)(V)	600
Rated current (Group C)(A)	50

CUL Recognized

Wire Range (Group B)(AWG)	22~8
Rated voltage (Group B)(V)	600
Rated current (Group B)(A)	50
Wire Range (Group C)(AWG)	22~8
Rated voltage (Group C)(V)	600
Rated current (Group C)(A)	50

VDE Approval

Wire Range (mm²)	0.34~10
Rated voltage (V)	630
Rated current (A)	57

Drawings

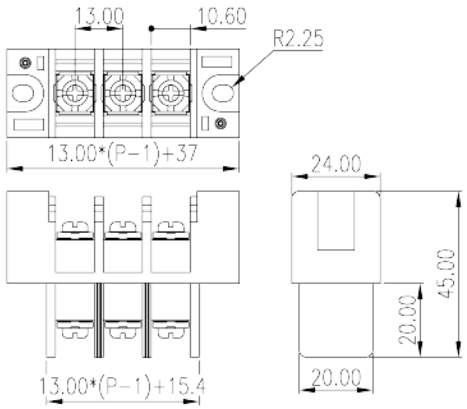

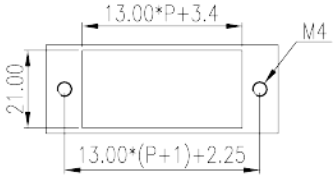

© DINKLE ENTERPRISE CO ,LTD. ALL RIGHT RESERVED

Approvals



© DINKLE ENTERPRISE CO ,LTD. ALL RIGHT RESERVED