DKM6

DIN Rail Terminal Blocks > Stud Connection

Date:2026-11-28Version:1.2

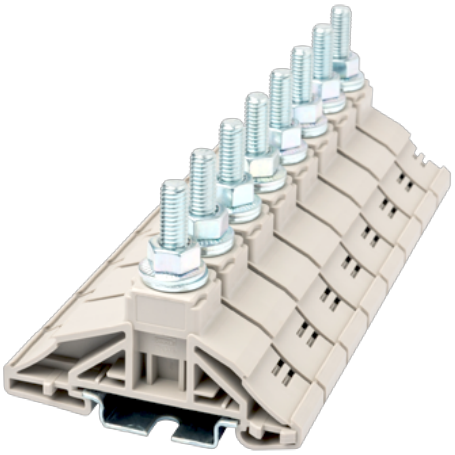

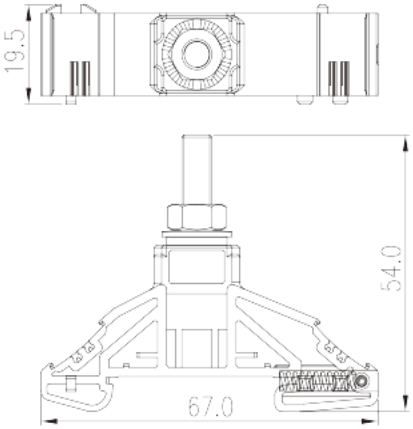

The web catalog is for reference only. Dinkle remains the right of product modification and engineering change of the design. The final product is made according to engineering drawing.

Product Description

M6, 1000V, 115A, Beige (default)

General information

Short description	DIN Rail terminal blocks, Stud Connection
Category	Stud Connection
Color	Beige (default)
Connection method	Stud Connection
Type of locking	Rail Mounting
Length (mm)	67
Width (mm)	19.5
Height (mm)	54
Level	Single level
Connection points	1

Material information

Insulation material	PA
Insulation material group	I
Flame retardant rating , compliant with UL94	V0
Insulation resistance	□500MΩ at DC 500V

© DINKLE ENTERPRISE CO ,LTD. ALL RIGHT RESERVED

Connection data-IEC

Rated voltage (V)	1000
Rated current (A)	125
Rated voltage (III/3)(V)	1000
Rated impulse voltage (III/3)(KV)	8
Conductor cross section solid. min (mm²)	2.5
Conductor cross section solid.max (mm²)	35
Conductor cross section stranded. min (mm²)	2.5
Conductor cross section stranded. max (mm²)	35
Screw thread	M6
Recommend tightening torque. min (N.m)	3
Recommend tightening torque. max (N.m)	6
Mounting rail	TS-35
End cover plate required	NO
Grounding connections	NO

Connection data-UL

Rated voltage (UL/CUL Group E)(V)	1000
Rated current (UL/CUL Group E)(A)	115
Min. solid wire connection (AWG) acc. to UL/CUL	14
Max. solid wire connection AWG acc. to UL/CUL	2

Environment & Safety

Operating temperature. max (°C)	120
Operating temperature. min (°C)	-40

UL Recognized

Wire Range (Group E)(AWG)	14~2
Rated voltage (Group E)(V)	1000
Rated current (Group E)(A)	115

CUL Recognized

Wire Range (Group E)(AWG)	14~2
Rated voltage (Group E)(V)	1000

© DINKLE ENTERPRISE CO ,LTD. ALL RIGHT RESERVED

Rated current (Group E)(A)	115

Drawings

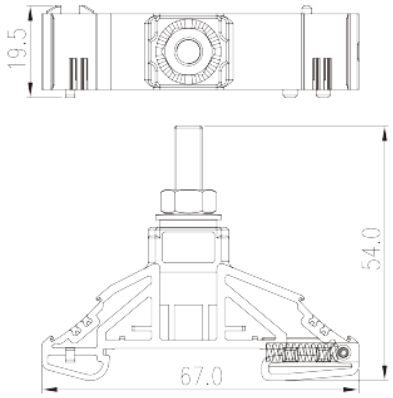

Approvals

© DINKLE ENTERPRISE CO ,LTD. ALL RIGHT RESERVED