EECH350R-XXP

PCB Terminal Blocks > PCB Connector-Socket

Date:2026-11-23Version:V1



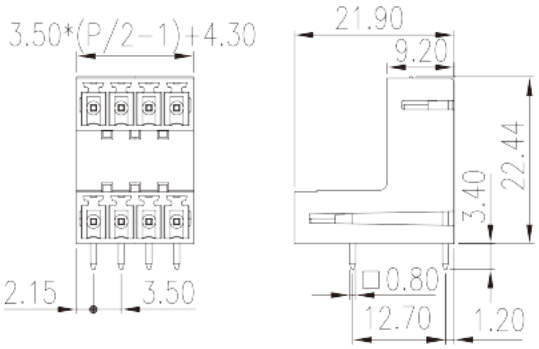

The web catalog is for reference only. Dinkle remains the right of product modification and engineering change of the design.
The final product is made according to engineering drawing.

Product Description

Pitch : 3.50 mm, 300V, 8A

General information

Short description	PCB Connector – Socket, Wave soldering
Category	PCB Connector – Socket
Pitch (mm)	3.50
Color	Green (default)
Type of locking	Without
Soldering method	Wave soldering
Length (mm)	3.50*(P/2-1)+4.3
Width (mm)	21.9
Height (mm)	22.44
Pin demensions (Thickness x Width)(mm)	0.8x0.8
PCB hole diameter (mm)	1.2~1.3
Number of positions	04P~32P
Level	Double level

Material information

Insulation material	PBT

© DINKLE ENTERPRISE CO ,LTD. ALL RIGHT RESERVED

Insulation material group	IIIa
Flame retardant rating , compliant with UL94	V0
Insulation resistance	□1000MΩ at DC 500V
Conductor material	COPPER ALLOY
Plating of conductor surface	Tin PLATED

Connection data-IEC

Rated voltage (V)	320
Rated current (A)	14
Rated voltage (II/2)(V)	320
Rated voltage (III/2) (V)	160
Rated voltage (III/3)(V)	160
Rated impulse voltage (II/2)(KV)	2.5
Rated impulse voltage (III/2)(KV)	2.5
Rated impulse voltage (III/3)(KV)	2.5

Connection data-UL

Rated voltage (UL/CUL Group B)(V)	300
Rated current (UL/CUL Group B)(A)	8
Rated voltage (UL/CUL Group D)(V)	300
Rated current (UL/CUL Group D)(A)	8

Environment & Safety

Finger protection (YES or NO)	YES
Operating temperature. max (°C)	120
Operating temperature. min (°C)	-40

UL Recognized

Rated voltage (Group B)(V)	300
Rated current (Group B)(A)	8
Rated voltage (Group D)(V)	300
Rated current (Group D)(A)	8

CUL Recognized

Rated voltage (Group B)(V)	300

© DINKLE ENTERPRISE CO ,LTD. ALL RIGHT RESERVED

Rated current (Group B)(A)	8
Rated voltage (Group D)(V)	300
Rated current (Group D)(A)	8

VDE Approval

Rated voltage (V)	320
Rated current (A)	14

Drawings

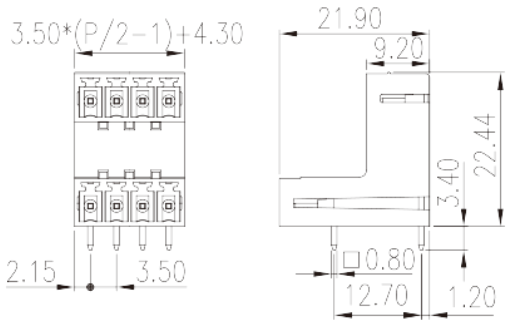

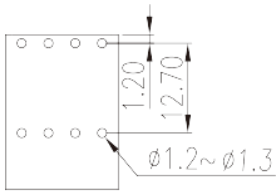

Approvals

© DINKLE ENTERPRISE CO ,LTD. ALL RIGHT RESERVED