# P-840

Bornas de Conexión de Barrera > Terminal de cable

Date:2026-11-25Version:1.2



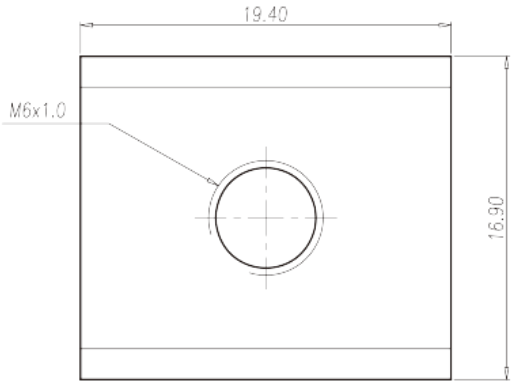


The web catalog is for reference only. Dinkle remains the right of product modification and engineering change of the design.
The final product is made according to engineering drawing.

## Descripción del producto

Pitch : 15.30 / 15.40mm, 1.6x4.0mm, 150A

## Informacion General

| | |
|---|---|
| Descripción corta | Barrier terminal blocks, Quick terminal blocks |
| CategoryCategoria | Quick terminal blocks |
| Paso(mm) | 15.30 / 15.40 |
| Dimensiones del pin (Espesor x anchura) | 1.6x4.0 |

## Informacion materia prima

| | |
|---|---|
| Conductor | COPPER ALLOY |
| Acabado | Tin PLATED |

## Datos IEC

| | |
|---|---|
| Máxima corriente (A) | 150 |
| Rosca de tornillo | M6 |

## Dibujo


© DINKLE ENTERPRISE CO ,LTD. ALL RIGHT RESERVED

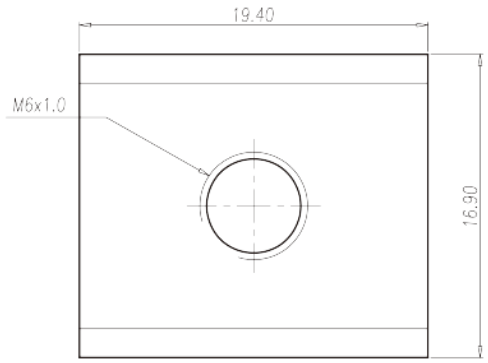


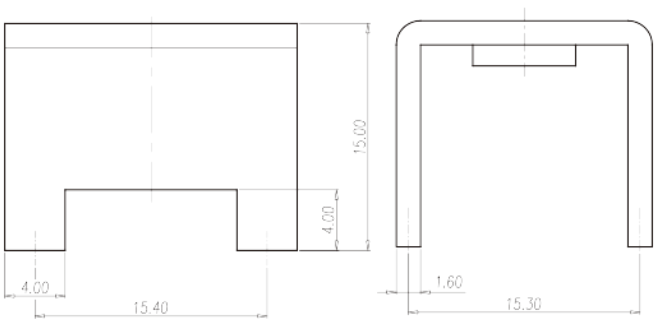


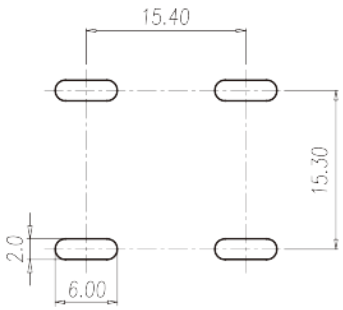


## Aprobaciones

CE RoHS Compliance


© DINKLE ENTERPRISE CO ,LTD. ALL RIGHT RESERVED